JOVE

RJ1.1 Receiver Kit

Assembly Manual

This page intentionally left blank.

JOVE

RJ1.1 Receiver Kit

Assembly Manual

March 1999

Receiver Kit and Manual
developed for NASA JOVE Project
by
Richard S. Flagg, RF Associates
1721-I Young Street
Honolulu, Hawaii 96826
(808) 947-2546 rf@aloha.net

This page intentionally left blank.

Contents

Theory of Operation 1
Components 2
Circuit Diagrams 7
Tools 12
Soldering 13
The Work Area 13
Identifying Parts 13
Assembling the Enclosure 18
Wiring the PC Board 21
Assembly of the PC Board and Enclosure 24
Testing and Alignment 28
Troubleshooting 34
Appendix A: Soldering Techniques 39
Appendix B: Resistor Color Code 41

This page intentionally left blank.

Radio JOVE

You are about to embark on building a short-wave receiver which will pick up radio signals from the planet Jupiter and also from the Sun. This receiver contains over 100 electronic components and pieces of hardware. Fabrication will include the handling of small, delicate, electronic parts, most of which will be mounted and soldered on a printed circuit (PC) board.

The radio uses many different types of electronic components, with each part performing a different job. However, before discussing these components and what they do, we will look at the overall receiver (depicted in the block diagram in Figure 1).

Construction Time Estimates

Part Identification	approx. 1 hr.
Receiver Construction	approx. 9 hrs.
Testing and Alignment	approx. 1 hr.
Total Time	approx. 11 hrs.

Theory of Operation

Radio signals from Jupiter are very weak—they produce less than a millionth of a volt (1 microvolt, 1μV) at the antenna terminals of the receiver. These weak radio frequency (RF) signals must be amplified by the receiver and converted to audio signals of sufficient strength to drive headphones or a loudspeaker. The receiver also serves as a narrow filter, tuned to a specific frequency to hear Jupiter while at the same time blocking out strong earth based radio stations on other frequencies. The receiver and its accompanying antenna are designed to operate over a narrow range of short-wave frequencies centered on 20.1 MHz (megahertz). This frequency range is optimum for hearing Jupiter signals.

Antenna

The antenna intercepts weak electromagnetic waves which have traveled some 500 million miles from Jupiter to the Earth. When these electromagnetic waves strike the wire antenna, a tiny RF voltage is developed at the

antenna terminals. Signals from the antenna are delivered to the antenna terminals of the receiver by a coaxial transmission line.

RF Bandpass Filter and Preamplifier

Signals from the antenna are filtered to reject strong out-of-band interference and are then amplified using a junction field effect transistor (JFET). This transistor and its associated circuitry provide additional filtering and amplify incoming signals by a factor of 10. The receiver input circuit is designed to efficiently transfer power from the antenna to the receiver while developing a minimum of noise within the receiver itself.

Local Oscillator and Mixer

The local oscillator (LO) and mixer perform the important task of converting the desired radio frequency signals down to the range of audio frequencies. The local oscillator generates a sinusoidal voltage wave form at a frequency in the vicinity of 20.1 MHz. The exact frequency is set by the front panel tuning control. Both the amplified RF signal from the antenna and the LO frequency are fed into the mixer. The mixer develops a new signal which is the arithmetic difference between the LO and the incoming signal frequency. Suppose the desired signal is at 20.101 MHz and the LO is tuned to 20.100 MHz. The difference frequency is therefore 20.101-20.100 = .001 MHz, which is the audio frequency of 1 kilohertz. If a signal were at 20.110 MHz, it would be converted to an audio frequency of 10kHz. Since the RF signal is converted directly to audio, the radio is known as a direct conversion receiver.

Low Pass Filter

To eliminate interfering stations at nearby frequencies, we use a filter which is like a window a few kilohertz wide through which Jupiter signals can enter. When listening for Jupiter or the Sun, the radio will be tuned to find a "clear channel." Since frequencies more than a few kilohertz away from the center frequency may contain interfering signals, these higher frequencies must be eliminated. This is the purpose of the low pass filter following the mixer. It passes low (audio) frequencies up to about 3.5 kHz and attenuates higher frequencies.

Audio Amplifiers

The purpose of the audio amplifiers following the low-pass filter is to take

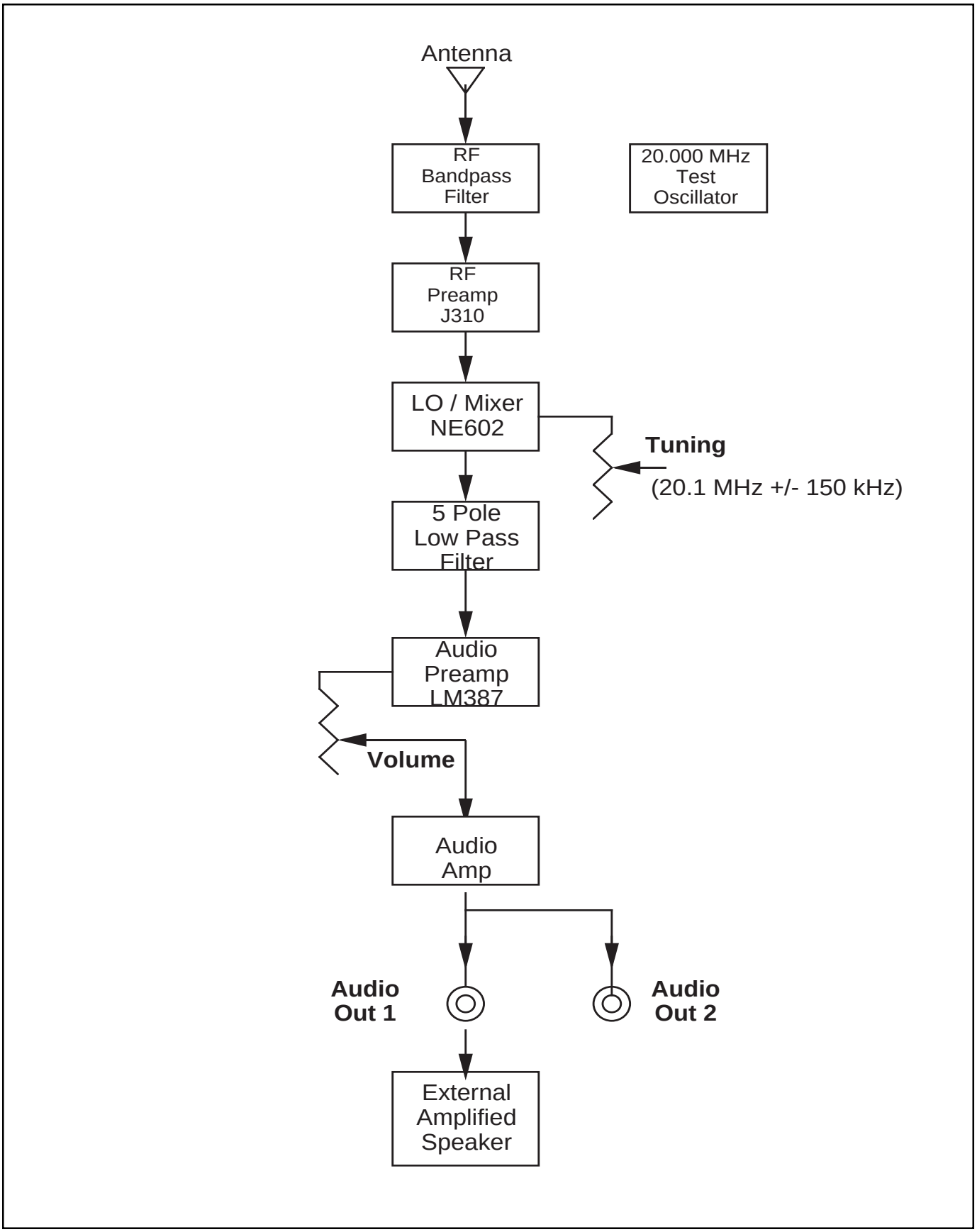

Figure 1. JOVE receiver block diagram

the very weak audio signal from the mixer and amplify it enough to drive headphones directly, or to drive an external amplified speaker assembly.

Components

The JOVE receiver uses many different electronic components (Figure 2) including wires, resistors, capacitors, inductors, diodes, transistors and integrated circuits. Each performs different functions.

Wires are made of conducting metal—they direct the flow of electrical current from one place to another. Since wire is a good conductor, it has a low resistance to the flow of electricity. The printed circuit (PC) board used in this kit uses traces of copper etched on an insulating fiberglass back plane in place of individual wires.

Resistors conduct electrical current, but they are designed to impede the flow of electrons. This characteristic of resistance limits the amount of current flow according to Ohm's law. Resistors dissipate electrical power by generating heat. The value of a resistor is given in Ohms (Ω), while its maximum power dissipation is given in watts. There are fixed resistors and variable resistors. Two variable resistors are used in this kit—one as the volume control and the other as the tuning control. The fixed resistors in this kit have several different values of resistance, but they are all 1/4 watt size. See Appendix B for reading resistor value color codes.

Capacitors appear as an open circuit to direct current (DC) but pass audio and radio frequency signals. The value of a capacitor is given in Farads (F), although it is most common to use capacitors with values in the range of microFarads (μF) or picoFarads (pF). Since the capacitor is physically made of two conducting plates separated by a very thin layer of insulation, it is possible for an electrical voltage to arc between the plates and destroy the capacitor. For this reason capacitors have a maximum voltage rating. Capacitors store energy in the electrical field between the plates but do not dissipate power like resistors.

Inductors are simply coils of wire which pass direct current and have the property of resisting changes in current flow. The value of inductance is the Henry (H), although it is most common to use coils whose inductance is

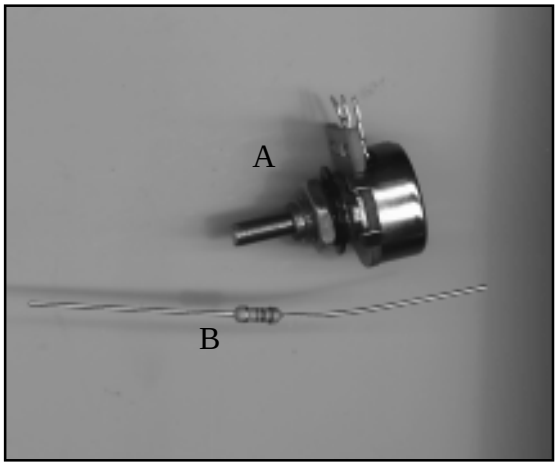

Resistors

A - Variable Resistor (10K ohm Tuning Control)

B - Fixed Resistor (10K ohm, 1/4 watt)

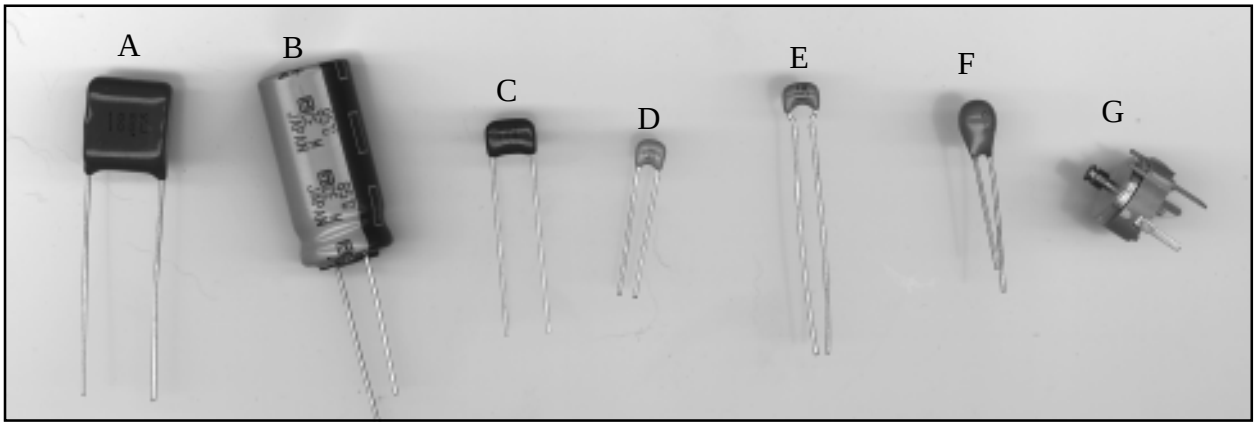

Capacitors

A - 1 µF, Metal Polyester

B - 330 µF, 25 vdc, Electrolytic

C - 0.1 µF, Metal Film

D - 10 pF, Disc Ceramic

E - 0.1 µF, Dipped Ceramic

F - 10 µF, 35vdc,Tantalum

G - 4-40 pF, Variable Capacitor

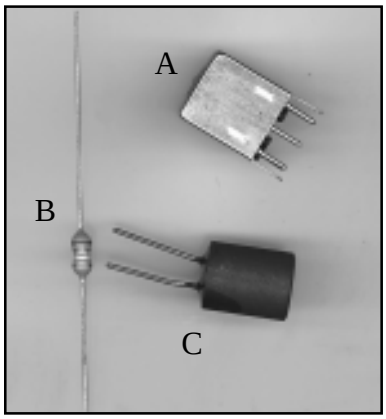

Inductors

A - Variable Inductor (1.5 µH)

B - Fixed Inductor (3.9 µH)

C - Fixed Inductor (82 mH)

Figure 2. Components

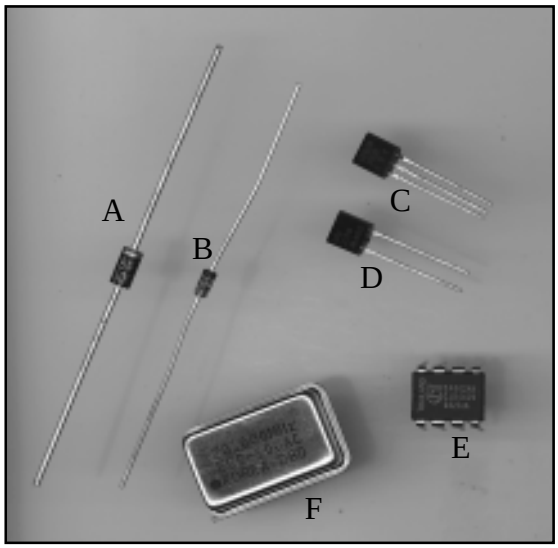

Solid State Devices

A - Diode 1N4001

B - Diode 1N914

C - Transistor 2N-3906

D - Varactor Diode MV-209

E - Integrated Circuit SA-602

F - Oscillator Module

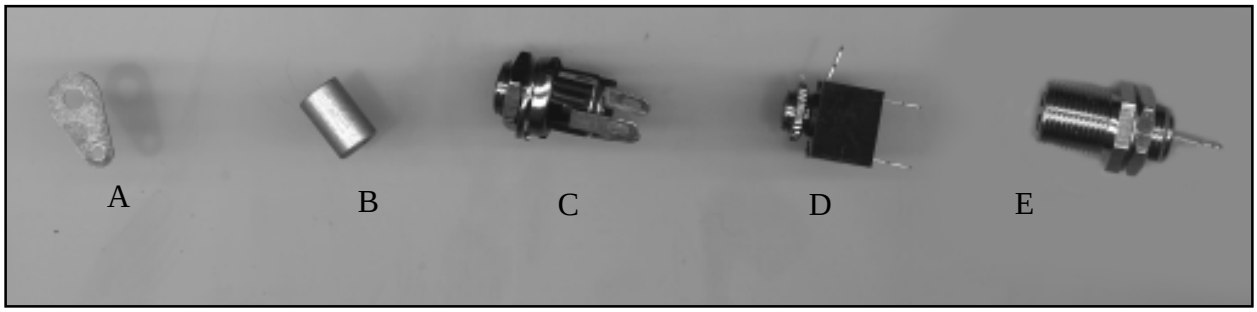

Connectors and Hardware

A - Solder Lug

B - Spacer

C - 2.1 mm Power Connector

D - 3.5 mm Stereo Audio Jack

E - Chassis Coaxial Connector

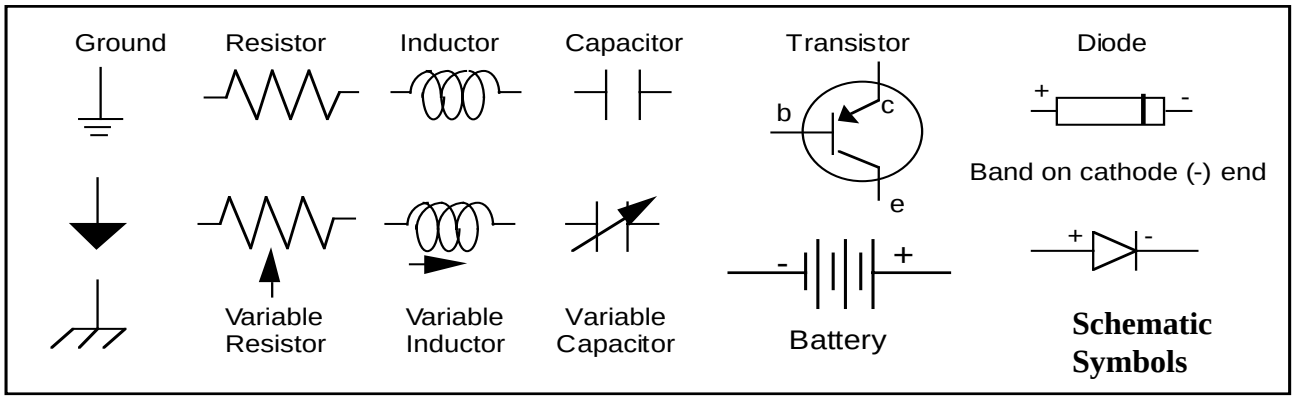

Figure 2. Components, continued

measured in milliHenries (mH), or microHenries (μH). Inductors store energy in the magnetic field surrounding the coil. When inductors and capacitors are used together they form a resonant circuit which swaps energy between the magnetic field of the inductor and the electric field of the capacitor. This has the effect of forming a resonant circuit which is tuned to a certain audio or radio frequency, much as an organ pipe is resonant at a particular audio frequency. Such a circuit acts like a filter, selecting only a narrow range of desired frequencies and rejecting others. Resonant circuits often use variable capacitors or variable inductors which must be adjusted for optimum performance at the desired frequency.

Resistors, capacitors, and inductors are used to route signals and DC voltages within a circuit and to select or reject certain frequencies by filtering. Certain capacitors (electrolytic type) have a (+) and (-) terminal and must be installed with the proper orientation in a circuit. Resistors, inductors, and non-electrolytic capacitors may be installed in any orientation.

Diodes are solid state devices which allow current flow in one direction only. The diode has an anode (+) and a cathode (-) and must be installed with the proper orientation.

Transistors are generally three-terminal solid state devices used to amplify signals. Bipolar transistor terminals are known as the base (b), emitter (e), and collector (c). A small signal injected into the base will appear amplified at the collector. Another type of transistor is the field effect transistor (FET). The terminals of this device are known as the gate (g), source (s), and drain (d). The transistor requires power to amplify signals so there is always a connection to a source of DC power.

Integrated Circuits are often made up of hundreds of transistors, diodes, and resistors all interconnected to perform specific functions. This kit uses three integrated circuits (ICs), each with 8 pins. The orientation of the IC in the circuit is important as each pin has a different use.

Circuit Diagrams

We have already seen a block diagram of the JOVE receiver, which shows the radio as a group of functional blocks connected together. While this type

of diagram does not show individual components like resistors and capacitors, it is useful in understanding signal flow and the various functions performed within the radio.

The next level of detail is the schematic diagram. A schematic is used to represent the wiring connections between all of the components which make up a circuit. The schematic diagram uses symbols for each of the different components rather than pictures of what the components actually look like. The symbols and pictures of several of the components used in this kit are seen in Figure 2. A schematic diagram of the complete receiver is seen in Figure 3. On this schematic, the part types are numbered sequentially. For example, inductors are denoted L1 through L7, and resistors are denoted R1 through R31.

Signal flow as shown in the schematic is as follows. The signal from the antenna connector (J2) is coupled to a resonant circuit (bandpass filter L1, C2, C3) and then to the J-310 transistor (Q1), where it is amplified. The output of the J-310 goes through another resonant filter (L3, C6) before being applied to the resonant input circuit (L4, C9, C10) of the SA602 integrated circuit (IC1), which serves as the local oscillator and mixer. The center frequency of the local oscillator is set by inductor L5 and adjusted by the tuning control R7. The audio output from IC1 passes through the low-pass audio filter (L6, L7, C20, C21, and C22). The audio signal is next amplified by IC2 (an LM387) before going to the volume control R15. The final audio amplifier stages comprise IC3 (another LM387), and the output transistors Q2 (2N-3904) and Q3 (2N-3906). After the receiver has been assembled, the variable capacitors C2 and C6 and variable inductors L4 and L5 will be adjusted to tune the receiver for operation at 20.1 MHz.

Another useful representation of the circuit is a PC board layout diagram (Figure 4). This is a pictorial representation showing the actual parts placement on the printed circuit board. This X-ray view from the component side of the board shows the components as rectangles or circles, and the trace side of the board as faint gray areas. A similar PC layout diagram (Figure 5) just shows the components, without the X-ray view of the traces. This view of the components is identical to the component outlines marked on the actual PC board.

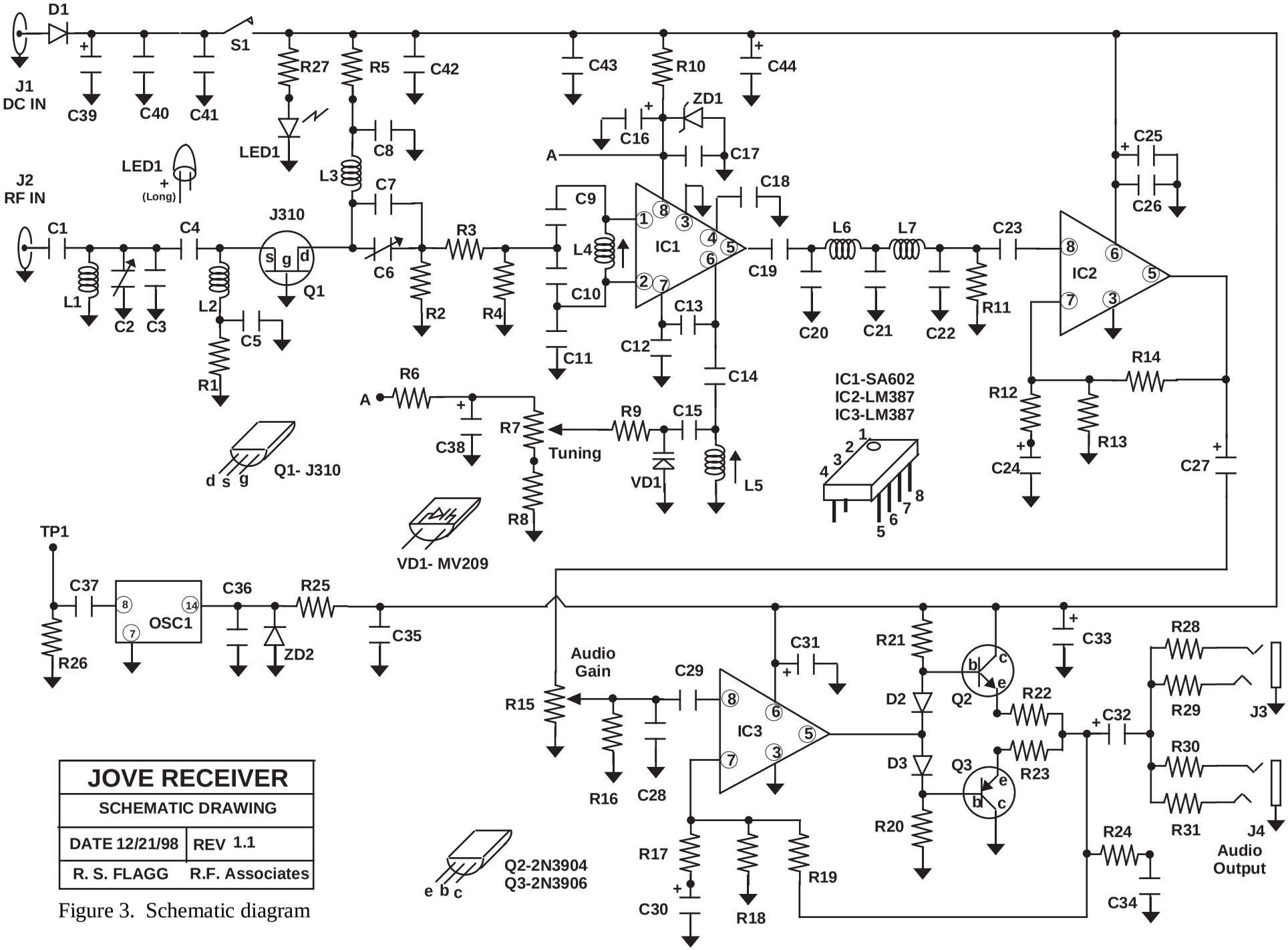

JOVE RECEIVER	
SCHEMATIC DRAWING	
DATE 12/21/98	REV 1.1
R. S. FLAGG	R.F. Associates

Figure 3. Schematic diagram

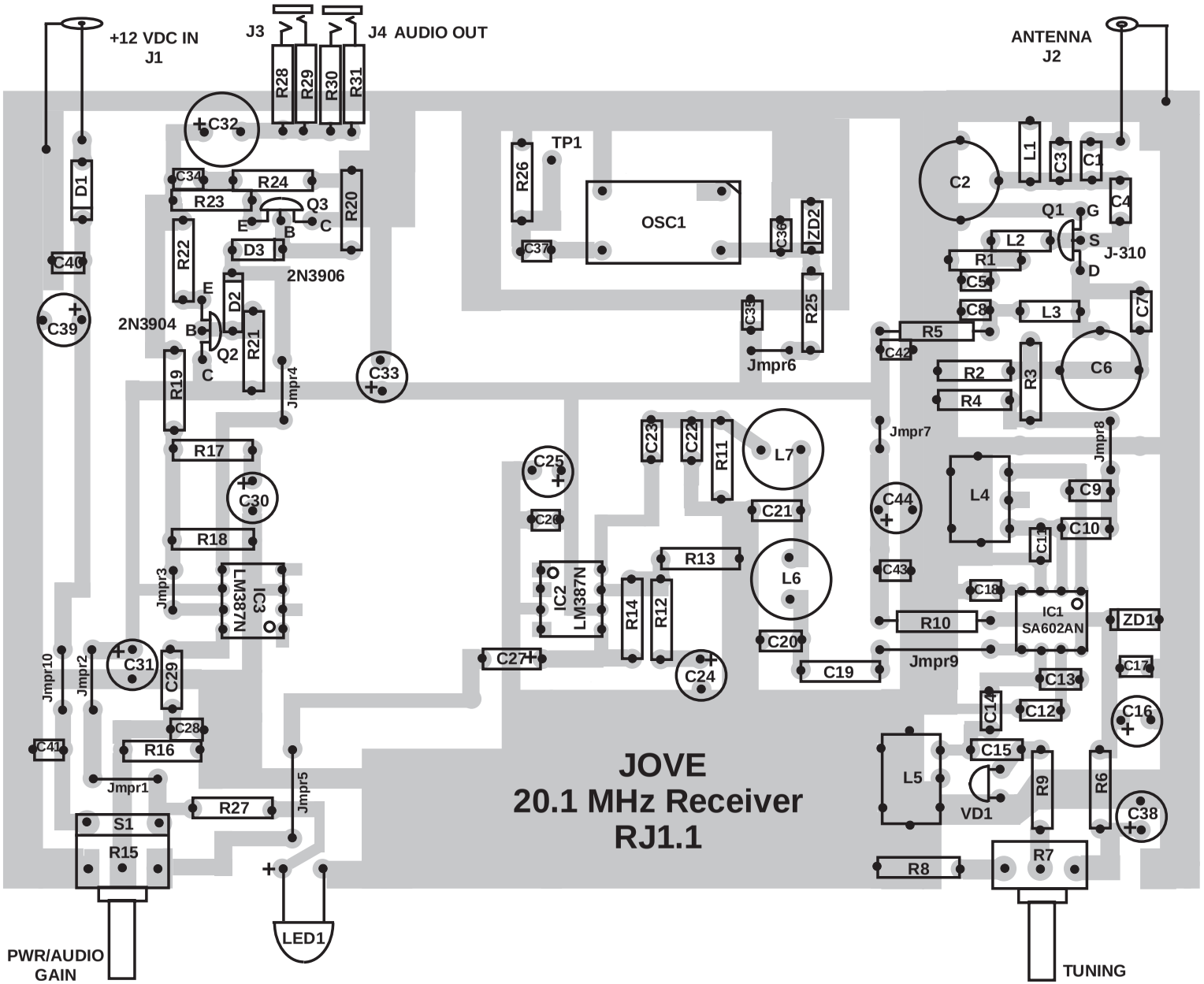

Figure 4. X-ray view of PC board from component side

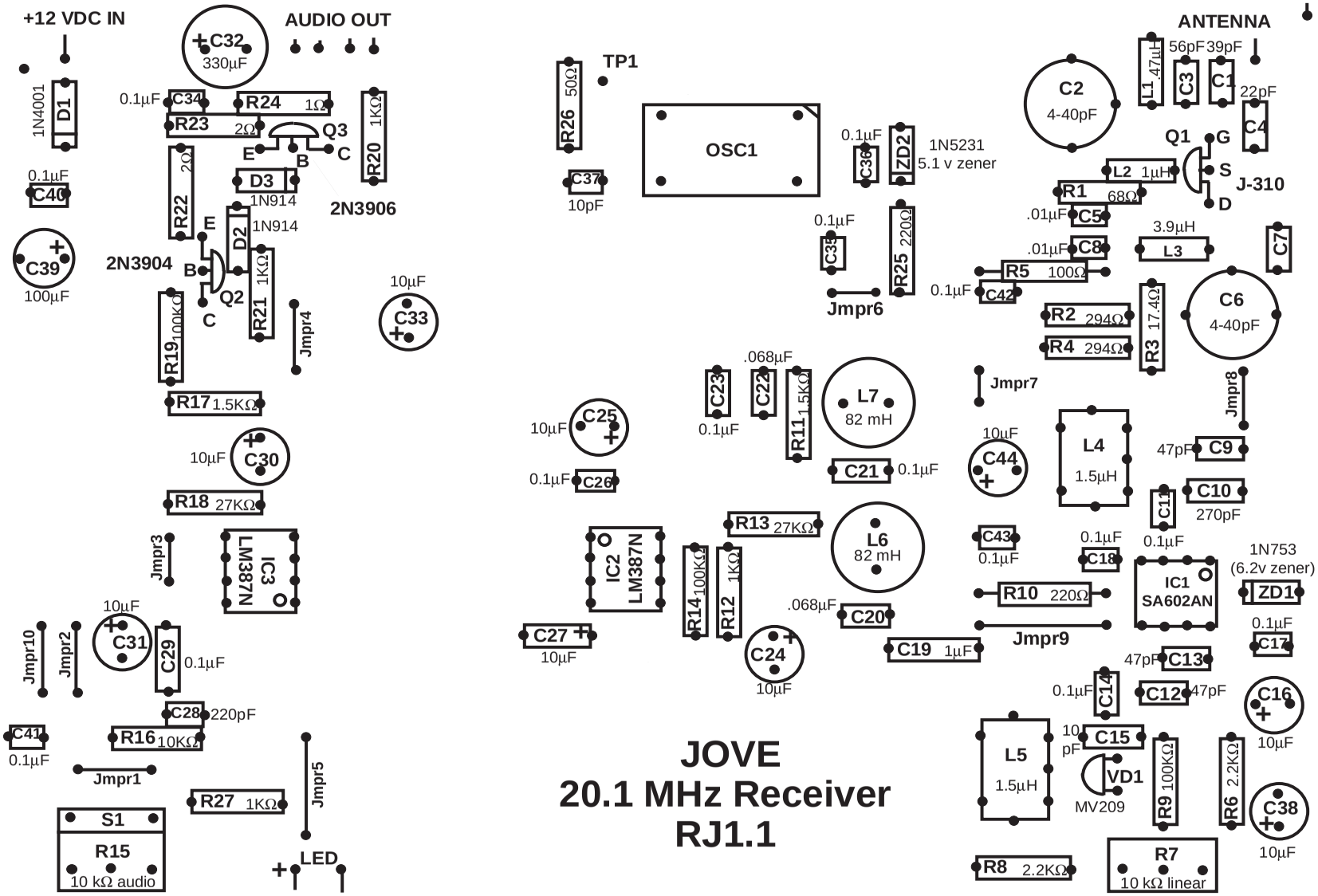

Figure 5. PC board - component side

An exploded view (Figure 6) shows the PC board and the enclosure, with connectors and controls mounted on the front and rear panels of the box.

The parts list (Table 1) identifies each component by its value and part number. As you begin construction, the first step will be to identify each component and check it off on the parts list to make sure that you have received all of the parts. This table is an important link between the bag of parts which you have received and installing those components in the right place in the radio as shown by Figures 4, 5, and 6.

Although this is a complicated project, it can be built successfully. You are urged to take great care to install the right parts in the right places on the PC board. Before soldering make sure you have the right component. Also be sure the orientation is correct—some parts MUST be installed with a certain orientation (electrolytic capacitors, transistors, integrated circuits and diodes).

TOOLS

(Radio Shack parts numbers follow many of the items)

Wire stripper (RS64-2129)

Soldering iron, 25 watt fine tip (RS64-2070C)

Solder, 60/40, .050 inch diameter rosin core (RS64-006), or finer

Diagonal cutters, 5 inch nippy cutters (RS 64-1833)

Needle nose pliers (RS 64-2033)

*Allen wrench (hex) 1/16 inch

*Sandpaper

X-acto® knife (or equivalent)

Scissors

Phillips screwdriver

Crescent wrench

Metal edge ruler

*Small screwdriver for adjusting variable capacitors

*Tuning tool for adjusting variable inductors

* these tools are included with the kit

Soldering

Key to successful fabrication of this JOVE receiver kit is your ability to solder. *It is important that each solder joint be made correctly.* Heat the joint so that the solder flows and joins the component lead to the solder pad, without applying so much heat that the component is damaged. See Appendix A for a guide to good soldering techniques.

The Work Area

Select a work area with good light and an electrical outlet. The area should be large enough for a comfortable work space for a couple of people, a soldering iron, tools, the instruction manual, and the kit parts. Keep the work space clean so parts don't get lost.

Identifying Parts

Go through the parts which you have received and check them off against the list in Table 1 (JOVE Parts List). With the aid of Figure 2, make absolutely sure you have identified each part correctly.

Table 1

JOVE Receiver Parts List

Actual marking found on component is shown in parentheses ( ). Two columns of check-off boxes are provided: use one for parts identification, and the other, for installation.

CAPACITORS	*Note polarity on all electrolytic capacitors*		
C1	39 pF, disc ceramic (390)		
C2	4-40 pF, variable capacitor		
C3	56 pF, disc ceramic (560)		
C4	22 pF, disc ceramic (220)		
C5	.01 µF, dipped ceramic		
C6	4-40 pF, variable capacitor		
C7	not used		
C8	.01 µF, dipped ceramic		
C9	47 pF, disc ceramic (470) or (47)		
C10	270 pF, disc ceramic (271)		
C11	0.1 µF, dipped ceramic (.1K)		
C12	47 pF, disc ceramic (470) or (47)		
C13	47 pF, disc ceramic (470) or (47)		
C14	0.1 µF, dipped ceramic (.1K)		
C15	10 pF, disc ceramic (100)		
C16	10 µF, 25 vdc, electrolytic		
C17	0.1 µF, dipped ceramic (.1K)		
C18	0.1 µF, dipped ceramic (.1K)		
C19	1 µF, metal polyester (105)		
C20	0.068 µF, 5% metal film (683)		
C21	0.1 µF, 5% metal film (104)		
C22	0.068 µF, 5% metal film (683)		
C23	0.1 µF, dipped ceramic (.1K)		
C24	10 µF, 25 vdc, electrolytic		
C25	10 µF, 25 vdc, electrolytic		
C26	0.1 µF, dipped ceramic (.1K)		
C27	10 µF, 35 vdc, tantalum, stripe, long lead +		
C28	220pF, disc ceramic (221)		
C29	0.1 µF, dipped ceramic (.1K)		
C30	10 µF, 25 vdc, electrolytic		
C31	10 µF, 25 vdc, electrolytic		
C32	330 µF, 25 vdc, electrolytic		
C33	10 µF, 25 vdc, electrolytic		
C34	0.1 µF, dipped ceramic (.1K)		
C35	0.1 µF, dipped ceramic (.1K)		

C36	0.1 μF, dipped ceramic (.1K)		
C37	10 pF, disc ceramic (100)		
C38	10 μF, 25 vdc, electrolytic		
C39	100 μF, 25 vdc, electrolytic		
C40	0.1 μF, dipped ceramic (.1K)		
C41	0.1 μF, dipped ceramic (.1K)		
C42	0.1 μF, dipped ceramic (.1K)		
C43	0.1 μF, dipped ceramic (.1K)		
C44	10 μF, 25 vdc, electrolytic		
DIODES	*Note Polarity*		
D1	1N4001		
D2	1N914		
D3	1N914		
LED1	light emitting diode (LED), red		
VD1	MV209, varactor diode		
ZD1	1N753, 6.2 v, zener diode, 400 mw		
ZD2	1N5231, 5.1v, zener diode, 500mw		
INDUCTORS	*Do Not Confuse L1, L2, L3 with Resistors*		
L1	0.47 μH, (gold, yellow, violet, silver)		
L2	1 μH, (brown, gold, black, silver)		
L3	3.9 μH, (orange, gold, white, gold)		
L4	1.5 μH, adjustable inductor		
L5	1.5 μH, adjustable inductor		
L6	82 mH, fixed inductor		
L7	82 mH, fixed inductor		
INTEGRATED CIRCUITS			
IC1	SA602AN, mixer / oscillator		
IC2	LM387, audio preamplifier		
IC3	LM387, audio preamplifier		
OSC1	20 MHz crystal oscillator module		
RESISTORS			
R1	68 ohm (blue, gray, black)		
R2	294 ohm (red, white, yellow, black, brown)		
R3	17.4 ohm (brown, violet, yel, gold, brown)		
R4	294 ohm (red, white, yellow, black, brown)		
R5	100 ohm (brown, black, brown)		
R6	2.2 Kohm (red, red, red)		
R7	10 Kohm linear potentiometer		

Table 1, continued

R8	2.2 Kohm (red, red, red)		
R9	100 Kohm (brown, black, yellow)		
R10	220 ohm (red, red, brown)		
R11	1.5 Kohm (brown, green, red)		
R12	1 Kohm (brown, black, red)		
R13	27 Kohm (red, violet, orange)		
R14	100 Kohm (brown, black, yellow)		
R15	10 Kohm potentiometer /switch		
R16	10 Kohm (brown, black, orange)		
R17	1.5 Kohm (brown, green, red)		
R18	27 Kohm (red, violet, orange)		
R19	100 Kohm (brown, black, yellow)		
R20	1 Kohm (brown, black, red)		
R21	1 Kohm (brown, black, red)		
R22	2 ohm (red, black, gold)		
R23	2 ohm (red, black, gold)		
R24	1 ohm (brown, black, gold)		
R25	220 ohm (red, red, brown)		
R26	47 ohm (yellow, violet, black)		
R27	1Kohm (brown, black, red)		
R28	10 ohm (brown, black, black)		
R29	10 ohm (brown, black, black)		
R30	10 ohm (brown, black, black)		
R31	10 ohm (brown, black, black)		
R32	47 ohm (yellow, violet, black)		
TRANSISTORS			
Q1	J-310, junction field effect, (JFET)		
Q2	2N-3904, bipolar, NPN		
Q3	2N-3906, bipolar, PNP		
HARDWARE / MISC			
E1	Enclosure 5x7x2		
PCB1	Printed Circuit Board		
J1	Power Jack, 2.1 mm		
J2	F female chassis connector		
J3	3.5 mm stereo jack, open ckt		
J4	3.5 mm stereo jack, open ckt		
spacers (2)	0.375 inch spacer, 4-40 thread		
K1, K2	Knob, 1/8 inch shaft		
P1	2.1 mm plug with 72 inch cord		
Screw (5)	4-40 thread, 1/4 inch long		
Lockwaser (5)	#4		
Flatwasher (1)	#4		
Nut (1)	4-40		
Solder Lug(1)	#4		
Wire	1ft red and 1ft black		
Feet (4)	Rubber adhesive feet		
Decals (2)	Front and rear panel decals		

OTHER MATERIAL			
Allen Wrench	1/16 inch for knobs		
Sandpaper			
Tuning tool	White - for tuning inductors L4, L5		
Plastic screw driver	For tuning capacitors C2 and C6		

Assembling the Enclosure

The receiver enclosure comprises 6 aluminum plates, 4 lengths of extruded channel, and 8 small Phillips screws. The front, rear, and bottom panels have been pre-punched with holes for controls, connectors and mounting screws. The exploded view (Figure 6) shows the proper orientation of these panels. The panels may have sharp edges and corners which must be sanded before use. **Do not assemble enclosure at this time.**

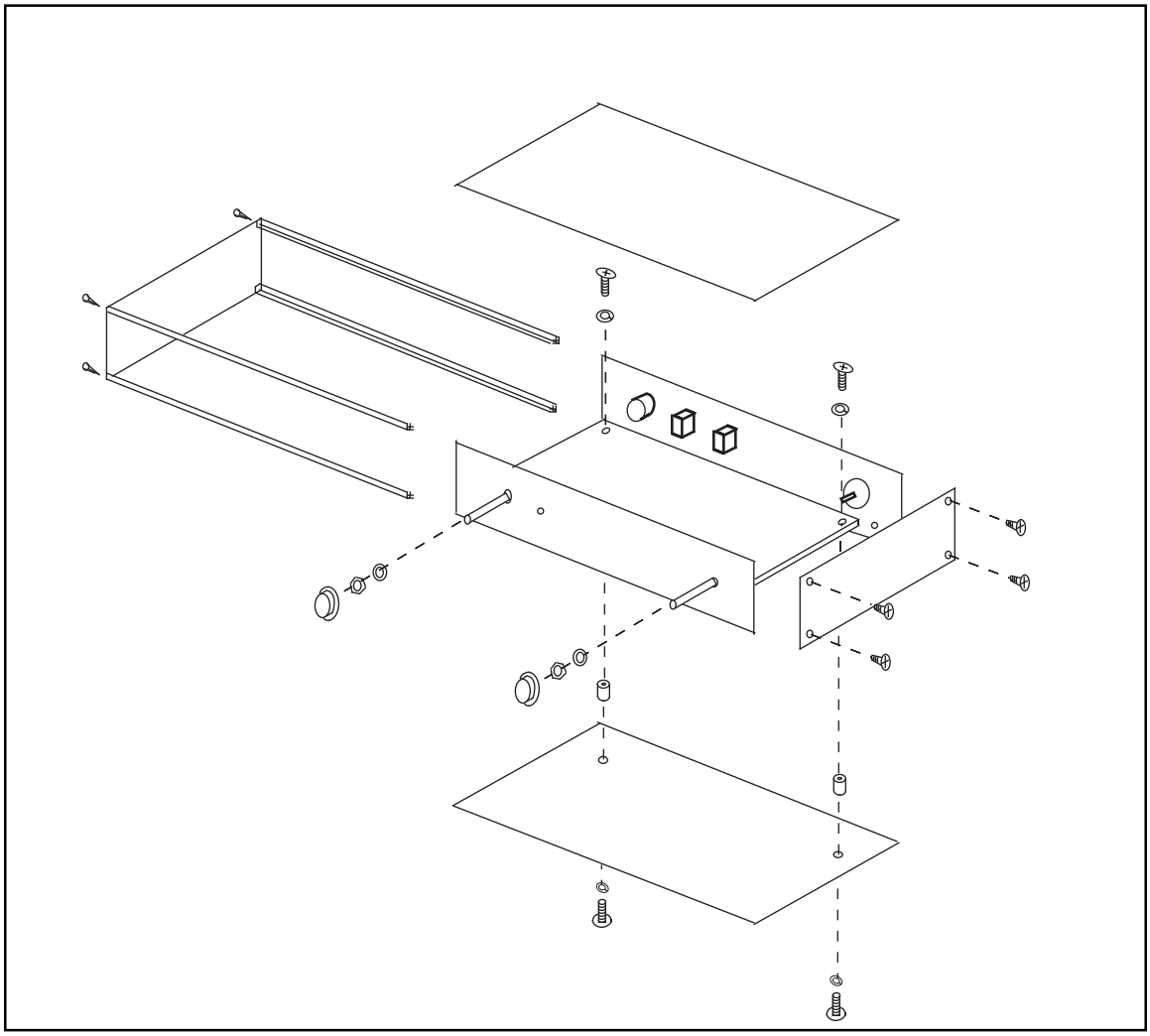

Figure 6. Exploded view of the enclosure and PC board

Preparing the enclosure panels:

1. ❑ Peel the thin plastic film coating from each panel.

2. ❑ Using the supplied sandpaper (or a fine file), remove the sharp edges and corners from each panel. Sand the edges only, being careful not to mar or scratch the panel surface.

Applying the front and rear panel decals:

1. ❑ Thoroughly clean the front and rear panels to remove any dirt or grease. Use a cleanser such as COMET® and a soft rag. After cleaning and washing, handle the panels only by the edges.

2. ❑ Trim the decals to match the size of the panels by cutting carefully along the outer border of each decal.

3. ❑ Orient the rear panel on a flat surface with the large hole for the antenna connector to the left (Figure 7). The small screw hole should be below and to the left of the antenna connector hole. Peel the rear decal from its backing and apply to the rear panel.

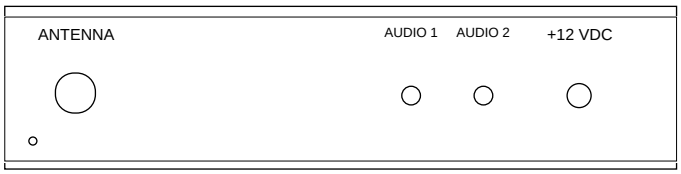

Figure 7. Rear panel

4. ❑ Using a sharp X-acto® knife, cut holes in the decal to match the panel holes.

5. ❑ The decal has two thin horizontal lines running the length of the panel, one near the top edge and the other, near the bottom. Using a metal straight edge as a guide, cut along the length of each line with the X-acto knife. The cut should go completely through the decal—it doesn't matter if you score the metal panel underneath. Peel off the 1/10 inch strip of decal lying between the cut line and the panel edge.

6. ❑ Repeat steps 3-5 for the front panel. The three panel holes are not centered vertically. Note the distance from the center line (running through the three holes) to the bottom and to the top of the panel. When viewed from the front side (where the decal is to be applied), the holes must be closer to the lower edge than the top edge.

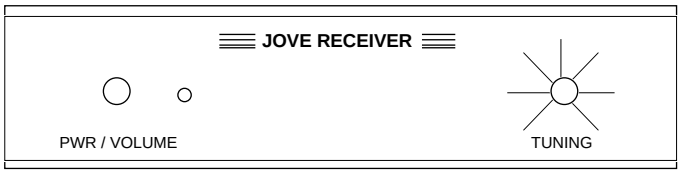

Figure 8. Front panel

7. ❑ Mount the power connector, two audio jacks, the antenna connector, and a solder lug to the rear panel (Figure 9). All connectors are passed through the panel from the "inside" with washers and nuts located on the decal side of the panel. Tighten the nuts firmly with a crescent wrench or pliers, being careful not to slip and cut the decal.

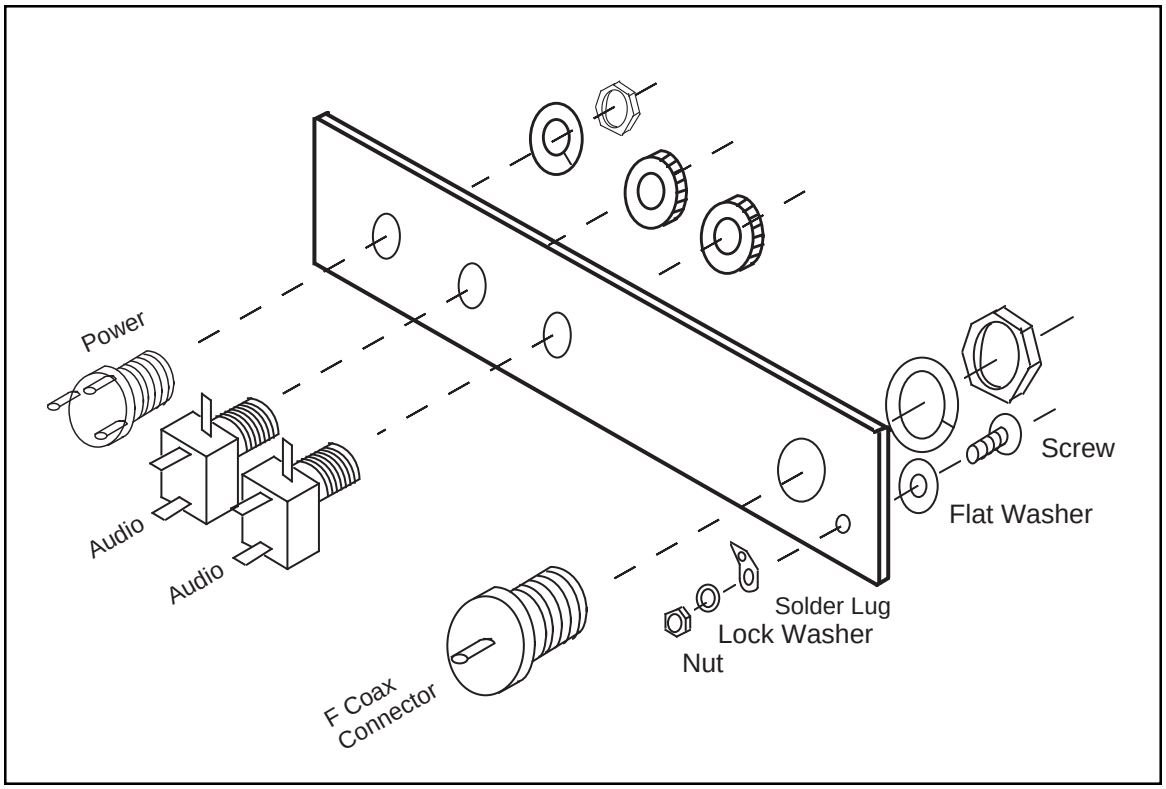

Figure 9. Rear panel assembly

This completes preparation of the enclosure. Set the panels aside until the wiring of the PC board is complete.

Wiring the PC Board

The PC board should be populated according to Figure 5. Install the larger parts first, leaving the small, delicate devices until last. This assembly order will give you a chance to sharpen your soldering skills before getting to the transistors and integrated circuits which may be damaged by excess heat.

Mounting the Components

Mount the components as close to the board as possible without putting excessive strain on the leads. Some component lead spacings will match the board hole spacing and the component will mount flush with the board. In other cases, the component leads must be formed to align with the holes. Hold the component body in your fingers and form the leads with the needle nose pliers. Don't grasp the component with the pliers.

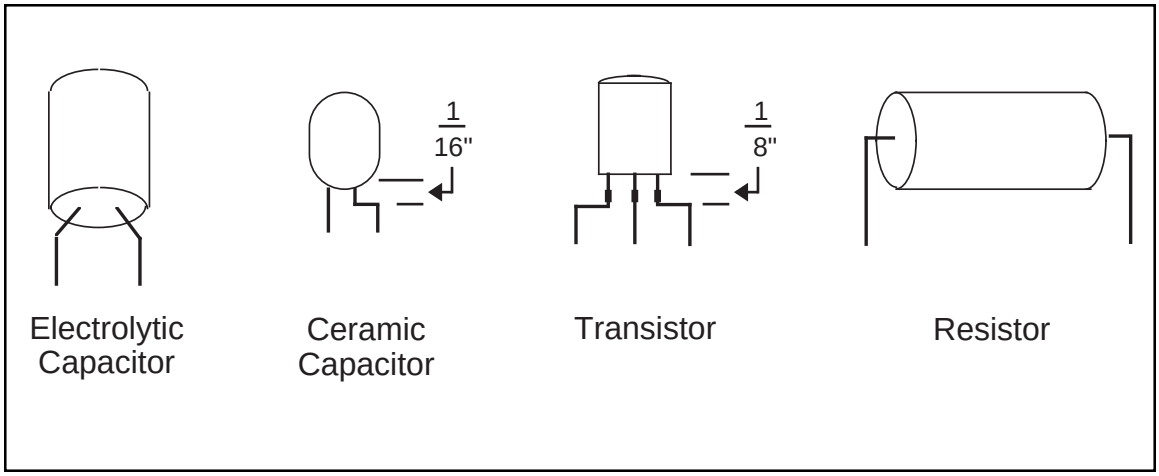

Figure 10. Forming the component leads to match up with PC board hole spacings

When forming the leads of the small ceramic capacitors, leave at least 1/16 inch between the body of the capacitor and any bends. The capacitor body may fracture if the leads are overstressed.

When forming the leads of transistors, always make bends farther than 1/8 inch from the tranistor body. Some transistor leads show a crimp mark near the transistor body. Never bend leads closer to the transistor than this crimp mark.

When you are cutting leads, shield the cut with your hand, or aim the work down, to prevent the cut wire from flying into someone's face.

Be very careful to use the correct component values. It's a lot easier to double check before soldering, than it is to have to unsolder and replace a part. *Refer to Appendix A for soldering techniques.*

After each component is soldered-in, make a check mark on the parts list (Table 1) and the PC parts layout diagram (Figure 5). As you go through the assembly procedure, put a check mark in each ❑ after completing the step.

Several photographs of the completed PC board are included near the end of the manual (Figure 20).

The following assembly sequence is recommended. Read each step completely before performing that step. *See Figure 2 for parts identification.*

The term "install" means to identify the part, form the leads, insert the component leads in the PC board, solder, and trim away the excess lead.

1. ❑ Install the tuning control potentiometer (variable resistor R7), and the audio gain potentiometer/on-off switch (R15/S1). Make sure that the solder pins are fully seated in the PC board holes and that the control shafts are parallel to the plane of the PC board.

2. ❑ Install the 10µF, 25vdc electrolytic capacitors, [C16, C24, C25, C30, C31, C33, C38, C44]. Carefully observe the polarity and proper orientation. Each capacitor has a longitudinal band with minus signs denoting the negative terminal. Save the leads that you cut from these capacitors, as they will be used as jumper wires in the next step.

3. ❑ Using needle nose pliers, form and install the jumper wires J1 through J10.

4. ❑ Install fixed resistors R1 through R27.

5. ❑ Install all 0.1µF dipped ceramic capacitors. [C11, C14, C17, C18, C23, C26, C29, C34, C35, C36, C40, C41, C42, C43] These capacitors are not polarized and can be installed in either orientation.

6. ❑ Install all remaining capacitors. Note polarity of C27, C32, C39.

7. ❑ Install all inductors, L1 - L7. *See Figure 2 for parts identification.*

8. ❑ Install all transistors, Q1-Q3. Note the orientation.

9. ❑ Install diodes D1, D2, D3, VD1, ZD1, ZD2. Note the orientation.

10. ❑ Install all integrated circuits IC1-IC3, and OSC1. Note the orientation of the dot denoting pin 1. (This dot or notch will be located adjacent to pin 1 or in the center between pins 1 and 8). The PC board component side diagram indicates the location of pin 1 with a small circle.

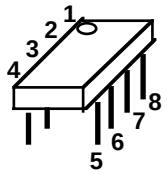

In the case of OSC1, three of the four corners are beveled while the corner near pin 1 is square. The PC board diagram shows the orientation of OSC1 by denoting the pin 1 corner with a diagonal slash at the corner.

When inserting the ICs into their mounting holes, you may need to gently squeeze the leads together so that they will align with the holes. Sometimes this is best done by inserting the pins along one side of the IC just barely into the holes, then using the blade of a screwdriver or some other flat object to push the pins on the other side of the IC inward until they drop into the holes. When soldering IC pins, it is a good idea to wait a few seconds between each pin to give the device a chance to cool off. *Be particularly careful not to form solder bridges between the IC pins.*

11. ❑ Install one end of each fixed resistor R28-R31 on the PC board. The bottom of each resistor should be flush with the board. The other end of each resistor will be soldered later to the audio jacks (see Figure 12).

This completes assembly of the PC board. The next job is to mount the PC board to the panels making up the enclosure, and to solder in the few remaining parts.

Assembly of the PC Board and Enclosure

1. ❑ Mount the PC board to the front panel. Simply slip the potentiometer shafts through the front panel holes and apply the lockwashers and nuts. Do not tighten nuts.

2. ❑ Form the leads of LED1 such that the LED fits into the front panel hole and the LED leads extend through the PC board mounting holes. The longer of the LED leads goes in the + hole. Tighten potentiometer nuts. Solder LED in place.

3. ❑ Partially assemble the enclosure using one end panel, the four extruded channel pieces, and four screws. Tighten screws just enough to maintain shape.

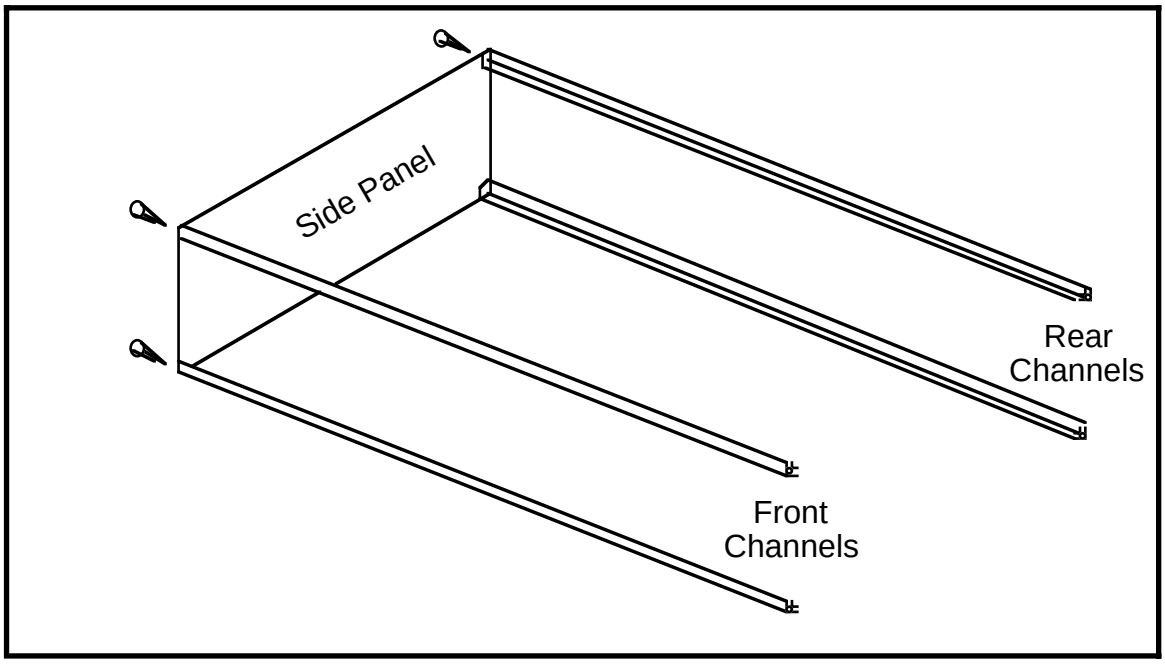

Figure 11. Partial assembly of the enclosure

4. ❑ Slide the front panel with the attached PC board into the front channel guides, moving it back until it is flush with the side panel. If the panel gets crooked in the guides, it may jam and refuse to slide along the grooves.

5. ❑ Prepare a 2 inch red wire and a 2 inch black wire by stripping1/4 inch of insulation from both ends of each wire. While holding the wire with the needle nose pliers, strip the insulation with the diagonal cutters or a knife, taking care not to nick the wires. With your fingers, twist the wire strands together so they will fit into the PC board hole.

6. ❑ Prepare the solder lug by sanding both sides thoroughly with the sand-paper. This makes the metal surface ruff for better contact when solder-ing.

7. ❑ Install the red wire on the center pin of the antenna connector on the back panel. Install the black wire on the solder lug adjacent to the antenna connector on the back panel.

8. ❑ Slide the rear panel into the rear channel guides, moving it back until it is flush with the side panel. Be sure that the panel is installed "right side up."

9. ❑ Install the red wire from the center pin of the antenna connector to the antenna hole on the PC board. Install the black wire from the solder lug adjacent to the antenna connector on the back panel to the ground hole on the PC board adjacent to the screw hole in the corner. The location of these wires on the board is easily seen in the X-ray view (Figure 4).

10. ❑ Mount the right side panel to the four channel guides with four screws. Tighten all 8 enclosure screws enough to maintain the enclosure shape. The enclosure now includes the front panel, rear panel, and both side panels supported by the channel guides.

11. ❑ Complete installation of resistors R28, R29, R30, and R31 as shown below. Leave a little extra lead length so that the resistor leads are not taut. First solder R29 and R31 on the bottom tabs of the two audio connectors. Then solder R28 and R30 to the top horizontal tabs as shown in Figure 12.

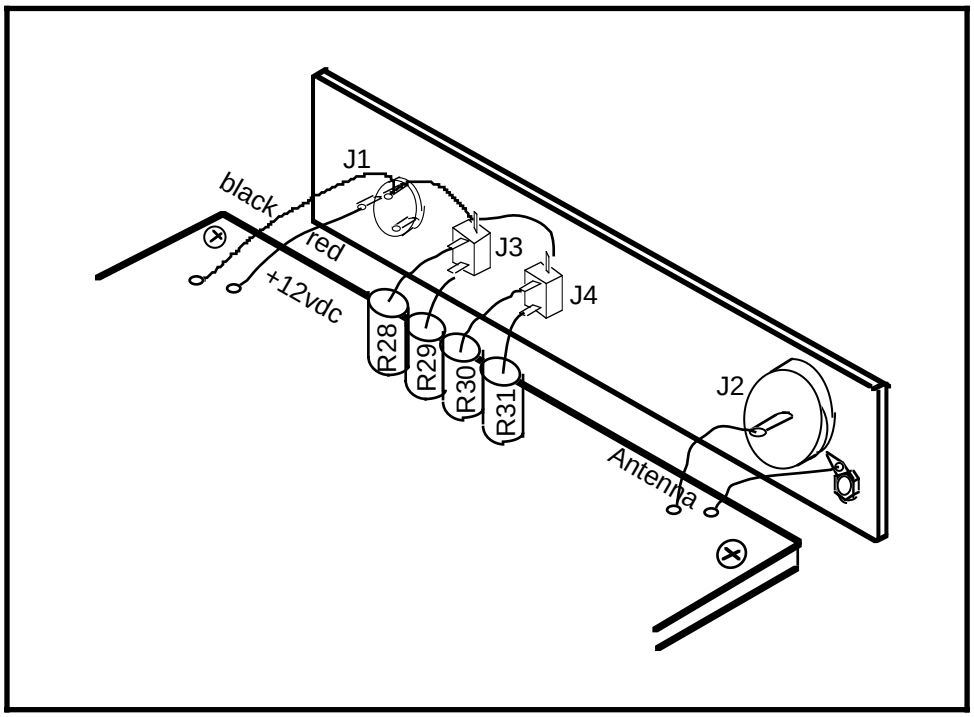

Figure 12. Rear panel wiring

12. ❑ Be sure that the power connector is installed as shown in Figures 9 and 12. Looking at the connector from the PC board side of the back panel, there should be one solder lug at 9 o'clock, one at 12 o'clock, and the third lug at the 3 o'clock position. Install a red wire to the power connector (9 o'clock lug) and PC board (Figure 13). Install black wires linking the PC board ground plane to the power connector and the vertical lugs on both J3 and J4 as seen in detail below. This will complete the soldering portion of the receiver kit assembly. Before proceeding, visually inspect the board for any missing components or solder bridges.

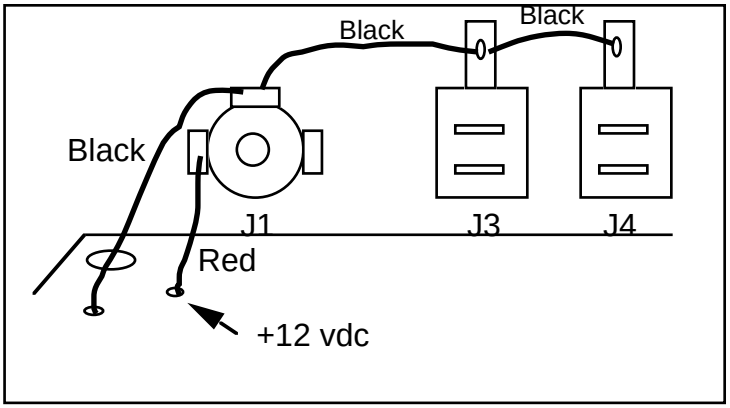

Figure 13. Rear panel power jack (J1) wiring detail

13. ❑ Install the spacers (Figure 14) below the rear corners of the PC board using 1/4 inch long 4-40 screws and lock washers. Remove the right side panel, slide in the bottom panel, and attach it to the spacers with 1/4 inch 4-40 screws and lock washers. The bottom panel holes are not equidistant from the edges—the hole on the TUNING control side is closer to the right edge than the hole on the VOLUME control side is to the left edge. You may need to flip the bottom panel if the holes do not line up with the spacers. Reattach the right side panel. Attach the four rubber feet to the corners of the bottom panel. At this point the enclosure is complete except for the top panel.

14. ❑ Solder resistor (R32) between the center pin of the antenna connector and the adjacent solder lug. Use the minimum necessary lead length. This resistor simulates the antenna during testing. It will be removed after testing and alignment is complete.

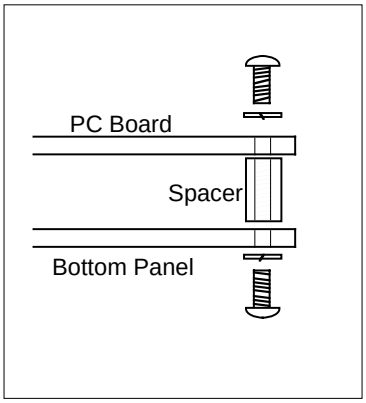

Figure 14. Mounting the spacers to the PC board and the bottom panel

Figure 15. JOVE receiver front panel with knobs

15. ❑ Install the two knobs. Align them on the shaft so that when the control is turned full counterclockwise, the index mark is near the 7 o'clock position (Figure 15). Once the knob is tightened down, using the enclosed hex wrench, the full counterclockwise rotation and the full clockwise rotation of the knob index mark should be equispaced from the 6 o'clock position.

Testing and Alignment

Before starting this procedure, read through the whole test section and get clearly in mind the steps which you plan to follow.

1. ❑ The receiver requires 12 volts DC (vdc) which may be obtained from a well regulated power supply or from a battery. Current drain is approximately 60 milliamps (ma). The power cable supplied with the kit has a female power plug on one end and stripped leads on the other. Notice that the power cable has a black stripe, or tracer, along one of the wires. This is the wire that is connected to the center conductor of the plug and must be connected to the (+) side of the power source. The Radio Shack RS 23-007 (Eveready) 12 volt battery or equivalent is suitable.

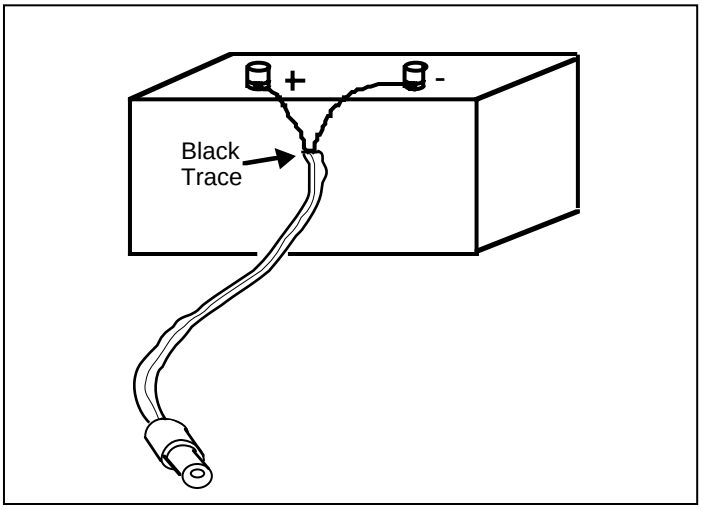

Figure 16. Wiring the power plug to a battery:
the black tracer goes to the + side of the supply

2. ❑ Turn the JOVE receiver power switch OFF. Connect either headphones or an amplified speaker (Radio Shack 277-1008C or equivalent) to the receiver audio output (J3 or J4). These jacks accept 3.5 mm (1/8 inch) monaural or stereo plugs. Connect the JOVE receiver to the 12 volt power source as shown in Figure 17.

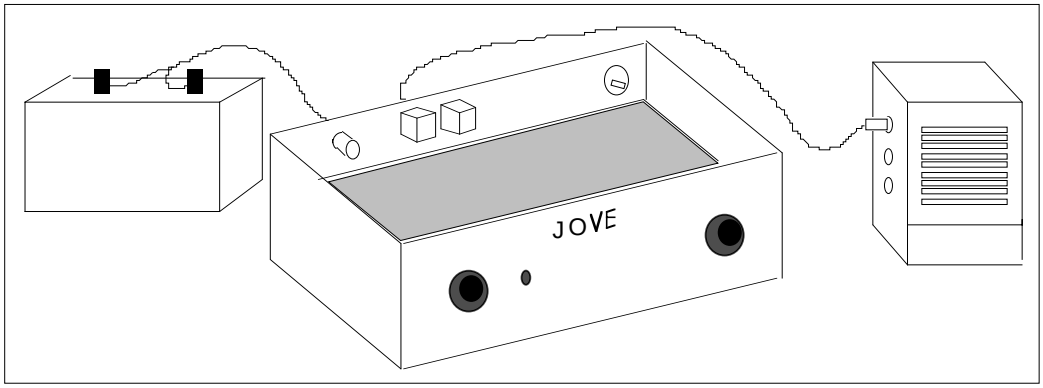

Figure 17. Test set-up: radio (with the cover off)
connected to the battery and an amplified speaker

3. ❑ If you are using a Radio Shack amplified speaker, turn it ON and adjust the volume control *on the speaker* up about 1/8 turn. If you are using headphones, hold them several inches from your ear as there

may be a loud whistle due to the internal test oscillator.. Turn the JOVE receiver ON. The LED should light. Set the JOVE volume control to the 12 o'clock position. Allow the receiver to "warm-up" for several minutes. [NOTE: troubleshooting procedures are included at the end of the manual. Refer to these in case the receiver does not perform as expected during the tune-up procedure.]

4. ❑ Set the TUNING control to the 10 o'clock position. *Carefully* adjust inductor L5 (Figure 18) with the white tuning stick until a loud low frequency tone is heard in the speaker (set volume control as desired). *Caution*: Do not screw down the inductor slugs too far, as the ferrite material could crack. By adjusting L5 to hear the tone, you are tuning the receiver to 20.00 MHz. The signal which you hear is generated in OSC1, a crystal controlled test oscillator built into the receiver. Once L5 has been set, DO NOT readjust it during the remainder of the alignment procedure. (When the receiver tunes 20.00 MHz with the knob set to the 10 o'clock position it will tune 20.1 MHz with the knob centered on the 12 o'clock position.)

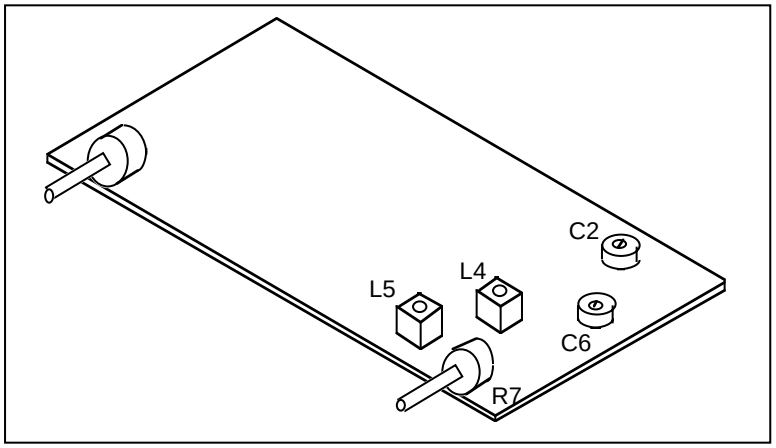

Figure 18. Locations of the variable capacitors and inductors

The following steps involve adjusting variable capacitors (C2 and C6) and a variable inductor (L4) to obtain the maximum signal strength (loudest tone) at the audio output. For some, it is difficult to discern slight changes in the strength of an audio tone simply by ear. For this reason three different methods are described, each using a form of test instrument. In the event that no test equipment is available, then a

fourth method—simply relying on the ear—is possible. In all cases, adjust the receiver tuning knob so that the audio tone is in the range of about 500 to 2000 Hz.

Use procedure A as a method to use in tuning up your JOVE receiver. Procedures B-D are optional tuning methods.

A. If no test equipment is available, then simply tune by ear for the loudest audio signal. Listen to the tone and carefully adjust the tuning knob to keep the pitch constant. If the pitch changes during the alignment, it indicates that the receiver has drifted off frequency. As you make adjustments, the signal will get louder. Reduce the receiver volume control as necessary to keep the tone from sounding distorted or clipped.

If you have the equipment and the time available then one of the following procedures (B-D) can be used to more optimally tune the receiver. Tuning by ear (method A) works quite well and these additional procedures are not required.

B. Use the JOVE strip-chart program which runs on a computer equipped with a sound card and the JOVE software. Use both audio outputs (J3 and J4) of the receiver, feeding one signal to the amplified speaker or headphones, and the other, to the sound card. Listen to the tone and carefully adjust the tuning knob to keep the pitch constant. If the pitch changes during the alignment, it indicates that the receiver has drifted off frequency. This program yields a graphical representation of signal strength vs time. Follow the setup instructions included with the software. As you make adjustments to the receiver and the output gets louder, you should reduce the receiver volume control. This will keep from overloading the output of the receiver on the strong test signal (the maximum undistorted output of the receiver audio circuit is 2.5 volts peak to peak, which is the same as 0.9 volts RMS). When the alignment is complete, and with the volume control at the 12 o’clock position, the output level should exceed 0.17 volts RMS (0.5 volts peak to peak).

C. Use an oscilloscope to observe the audio output of the receiver. Use both audio outputs (J3 and J4) of the receiver, feeding one signal to the amplified speaker or headphones, and the other, to the oscilloscope vertical input. Listen to the tone and carefully adjust the tuning knob to keep the pitch constant. If the pitch changes during the alignment, it indicates that the receiver has

drifted off frequency. The oscilloscope should be AC coupled with the vertical sensitivity set to 0.1 volts/cm. Adjust the receiver volume to yield an output of approximately 0.3 volts peak to peak (less is OK, as long as you can see a good trace on the scope). Adjust the horizontal sweep time to give several cycles of the tone along the time axis (1 millisecond per cm is a good sweep setting). As you make adjustments to the receiver and the output gets louder, you should reduce the receiver volume control. This will keep from overloading the output of the receiver on the strong test signal (the maximum undistorted output of the receiver audio circuit is 2.5 volts peak to peak, which is the same as 0.9 volts RMS). When the alignment is complete, and with the volume control at the 12 o'clock position, the output level should exceed 0.5 volts peak to peak.

D. Use a voltmeter (analog or digital) capable of measuring audio frequency voltages. Use both audio outputs (J3 and J4) of the receiver, feeding one signal to the amplified speaker or headphones, and the other, to the voltmeter input. Listen to the tone and carefully adjust the tuning knob to keep the pitch constant. If the pitch changes during the alignment, it indicates that the receiver has drifted off frequency. Set the receiver volume control for a meter reading on the AC volts scale of approximately 0.1 volts. As you make adjustments to the receiver and the output gets louder, you should reduce the volume control, always keeping the meter reading below 0.7 volts. When the alignment is complete, and with the volume control at the 12 o'clock position, the output level should exceed 0.17 volts RMS.

Regardless of which of the four alignment methods you use, the adjustments to L4, C2, and C6 are quite sensitive, so take care to get the

best response possible. Also make sure that the receiver stays tuned to the test oscillator during the alignment. The receiver may drift slightly in frequency just after turn-on, so you need to wait several minutes after turn-on, until the pitch of the output tone is steady, before doing the alignment. *You may find that when you put your hand and the tuning stick into the receiver, the receiver changes frequency. If this happens, make a slight tuning adjustment and then remove your hand and take the reading. Reminder: do not adjust L5 once the receiver has been set on frequency at the beginning of step 4.*

5. ❑ Adjust the variable capacitor C6 for maximum signal strength.

6. ❑ Adjust inductor L4 for maximum signal strength.

7. ❑ Adjust variable capacitor C2 for maximum signal strength.

8. ❑ Repeat steps 5-7.

9. ❑ This completes the alignment and testing of the receiver. Turn everything off and disconnect the receiver from the power supply. If you are using a Radio Shack amplified speaker, be sure to turn it off, as there is no power light to remind you that it is turned on.

10. ❑ Unsolder and remove resistor R32. Be careful not to unsolder the lead wire running from the antenna connector to the PC board or the ground wire running from the solder lug to the PC board.

11. ❑ Snip jumper (Jmpr6) and separate the wires by at least 1/8 inch. This removes power from the test oscillator (OSC1). If you need to repeat the alignment procedure at a later date simply reconnect this cut jumper.

12. ❑ Remove the right hand side panel, slide on the top, re-attach the right hand side panel. You are done with the receiver.

To test the receiver on the air, simply connect the antenna. For best performance, use a 50 ohm antenna designed to operate in the frequency range of 19.9 - 20.2 MHz. At certain times of the day, you should be able to hear WWV or WWVH on 20.000 MHz. These are standard time and frequency stations, located in Colorado and Hawaii, which broadcast the time of day as

well as other information related to propagation and solar-terrestrial conditions. The JOVE direct conversion receiver design does not allow clear reception of amplitude modulated (AM) stations like WWV, so the voice will probably be garbled, unless you tune very precisely. The receiver does work well on single sideband (SSB) signals and code (CW).

Assuming everything worked—CONGRATULATIONS—otherwise consult the troubleshooting section.

TROUBLESHOOTING

If the LED does not light when the power switch is turned on, check the following:

1. Power supply is turned on and putting out 12 volts DC.

2. Power cord is wired correctly and firmly seated in the receiver power jack.

3. Diode D1 is installed with the correct orientation.

4. LED1 is installed with the correct orientation.

If the LED is lit, but there is no audio output from the amplified speaker, check that the battery in the amplified speaker is good and the speaker is turned on and properly connected to the receiver.

If the radio still does not function, consult Figure 19 which shows proper DC operating voltages at many points in the receiver. You will need a voltmeter (preferably a digital model) to measure actual receiver voltages.

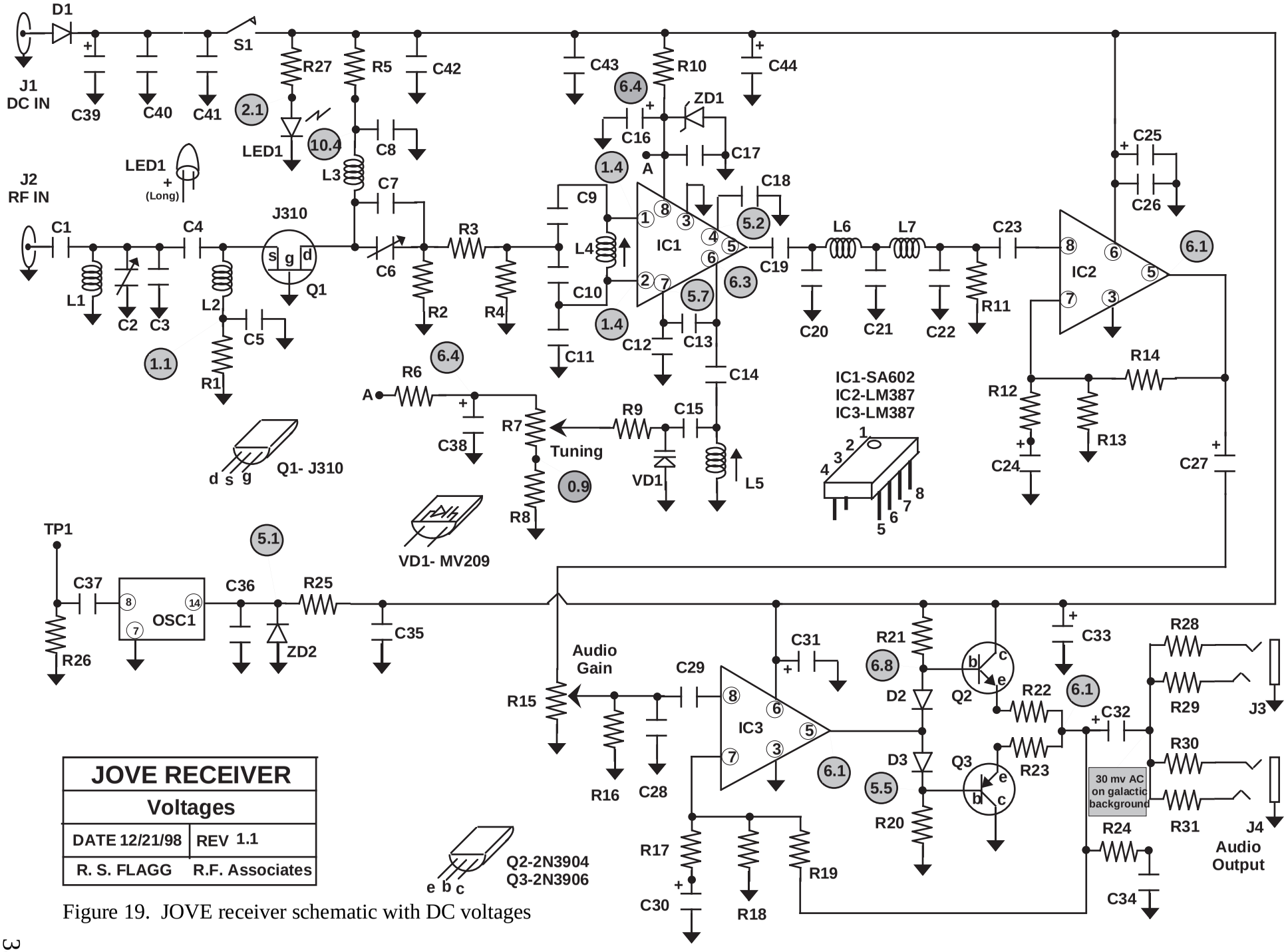

Figure 19. JOVE receiver schematic with DC voltages

This page intentionally left blank.

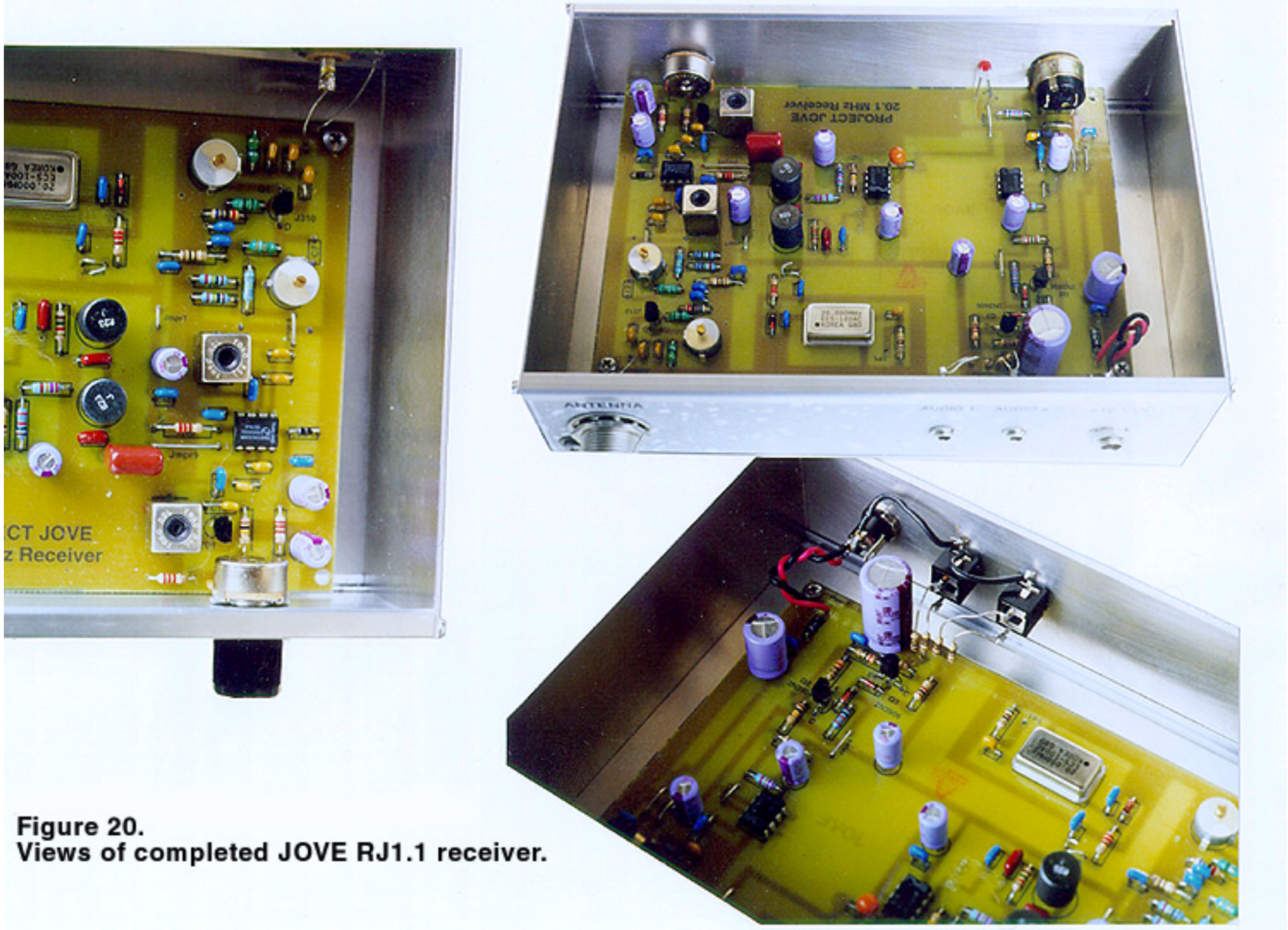

Figure 20.
Views of completed JOVE RJ1.1 receiver.

This page intentionally left blank.

Appendix A

Soldering Techniques

Use a 15-25 watt soldering iron and 60/40 rosin core solder, 0.05" diam.

1. Wipe the hot iron tip on a wet sponge and tin the tip (melt a small amount of solder on the tip). This step is not necessary prior to every solder joint but should be done whenever there is a build-up of residue on the tip.

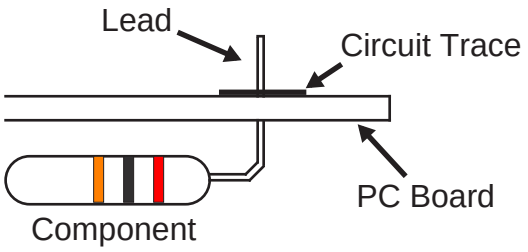

2. Touch the tip of the iron firmly to the junction of the circuit trace and the component lead, heating both for between 1 and 2 seconds. The iron tip should remain in contact with the joint through step 4.

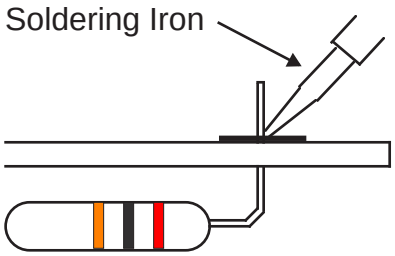

3. Apply solder to the pre-heated joint. As the solder melts, feed a small amount (approximately 1/4") into the pool of molten solder forming at the junction of the solder trace and lead. This should take no more than 1 second.

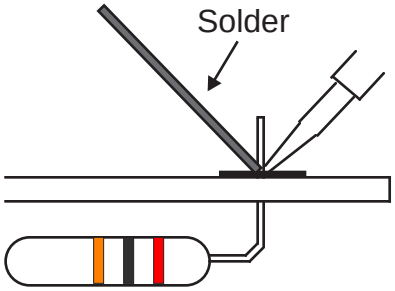

4. Remove the solder and continue to heat the joint for another second or until the solder is melted, Keep to a minimum the time the joint is heated, while making sure the solder is melted. The finished solder joint should be shiny and flow in contact with the component lead.

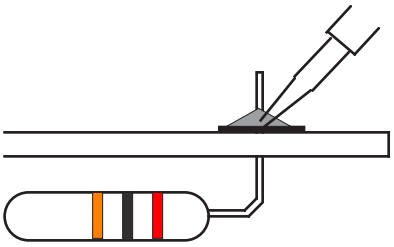

5. Cut the component lead flush with the top of the solder joint. Be sure the cut-off wire does not fall on the board shorting out other connections.

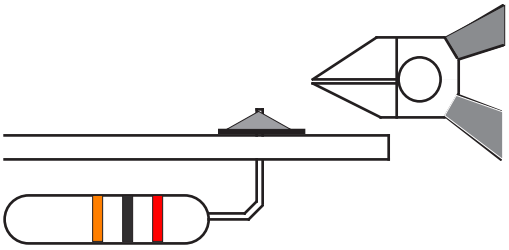

This page intentionally left blank.

Appendix B

Resistor Color Code

A. First significant figure of resistance in ohms
B. Second significant figure of resistance in ohms
C. Decimal multiplier
D. Resistance tolerance in percent

Color	Value	Multiplier	Tolerance
Black	0	1	
Brown	1	10	
Red	2	10^2	
Orange	3	10^3	
Yellow	4	10^4	
Green	5	10^5	
Blue	6	10^6	
Violet	7	10^7	
Gray	8	10^8	
White	9	10^9	
Gold	-	0.1	5%
Silver	-	0.01	10%

Using the resistor at the top of the page as an example:
A = yellow = 4, B = violet = 7, C = Orange = 10^3 = 1000, D = gold = 5%
The resistor value is 47,000 Ohms and it has a 5% tolerance.
The multiplier 1000 is also known as kilo (K), so the resistor is 47 kOhms.
If the multiplier were blue = 10^6 = 1,000,000 [mega (M)], then the resistor value would be 47 MOhms - pronounced 47 meg Ohms.